Automatic weighing system for gravimetric evaluation of dust-loaded filters during engine development

Type AWS-3

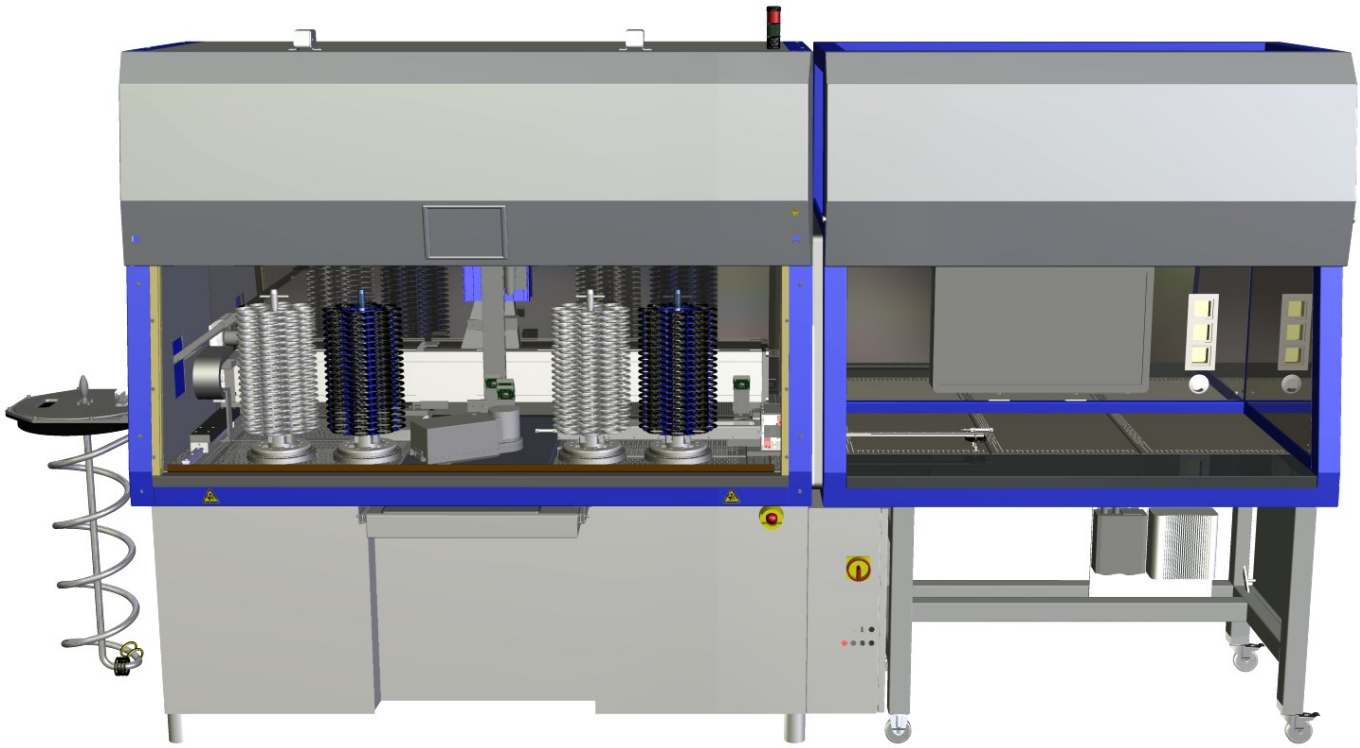

Comde-Derenda GmbH
Kieler Strasse 9, 14532 Stahnsdorf / Germany
Phone: +49 3329 69027-10
Fax: +49 3329 69027-19
info@comde-derenda.de
www.comde-derenda.de

Automatic weighing system for gravimetric evaluation of dust-loaded filters during engine development (Pat. pend.)

Type AWS-3

The AWS-3 weighing system automatically registers and documents the amount of particulate matter contained in engine exhaust. This particulate matter is collected from the exhaust gas system, using filters 47 mm in diameter.

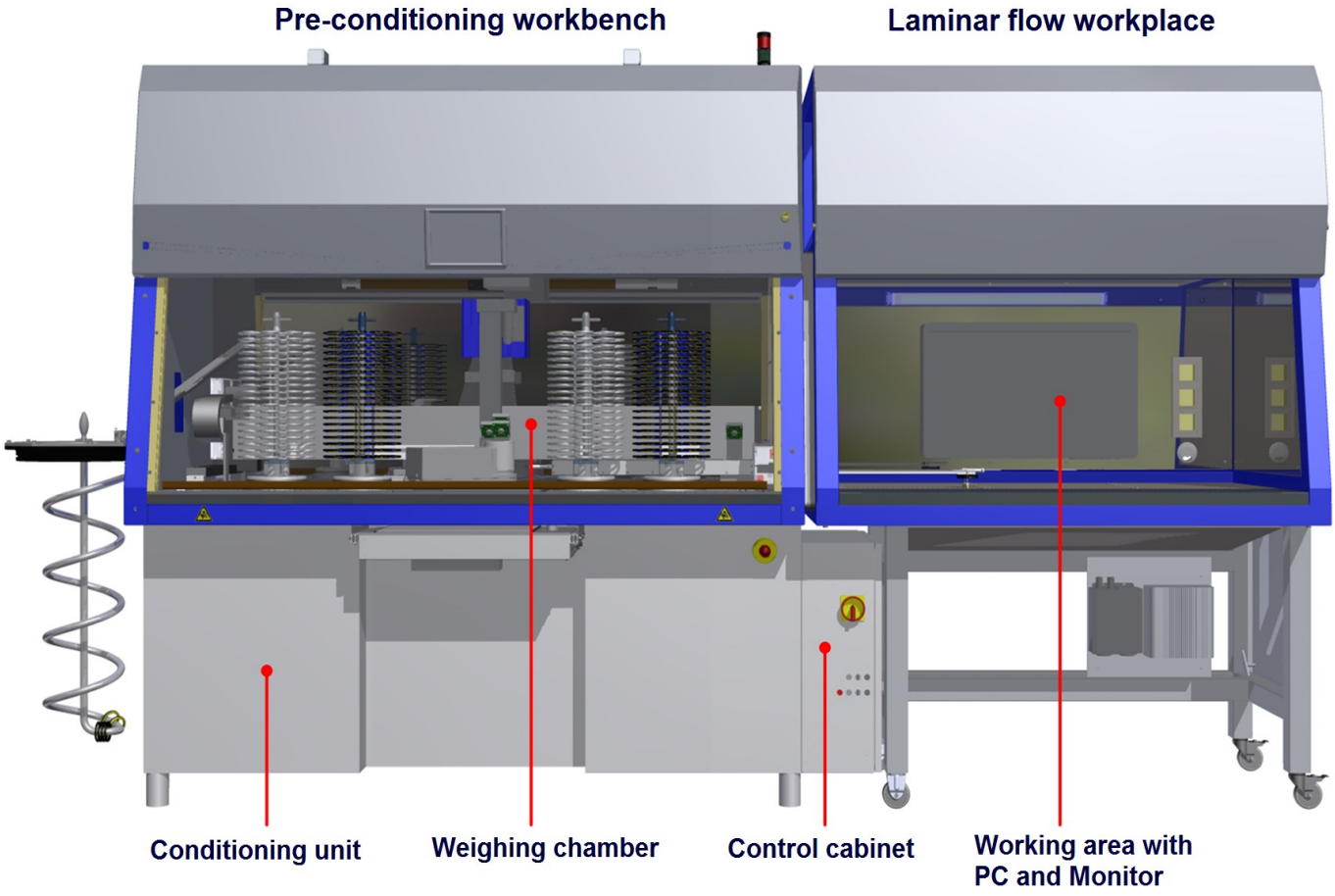

- Very exact, automatic weight determination system for filters with a diameter of 47 mm.
- Automatic registration and documentation of the amount of particulate contained in engine exhausts.
- Great reduction of stress and strain for personnel due to automation of the entire weighing process. This reduces the personnel support of the weighing system and brings great reliability and reduction of measuring deficiencies.
- Air-tight housing to isolate the weighing system from the outside world. This is to keep the system from being contaminated by airborne particles and to maintain the specified climatic conditions (temperature and humidity).
- Ultra-microbalance: Sartorius weighing module Cubis® 2.7SDM (other balances can be used on request).
- Wind protection device for the weighing module.

Comde-Derenda GmbH
Kieler Strasse 9, 14532 Stahnsdorf / Germany
Phone: +49 3329 69027-10
Fax: +49 3329 69027-19
info@comde-derenda.de
www.comde-derenda.de

Introducing the AWS-3 automatic weighing system

When analyzing the exhaust gas produced by engines it is necessary, among other items, to measure the particulate concentration in the exhaust.

The engine manufacturers' test beds feature a particulate filter holder located in the engine's exhaust gas system. The filters are 47 mm in diameter. The engine's exhaust is routed through this device. The particulates deposited on the filters can be collected and the share of particulate then determined by gravimetric means (i.e. by weighing).

The AWS-3 automatic weighing system was developed specifically to register and document the particle concentration in engine exhausts.

The weighing system itself comprises essentially two units. The first unit is a pre-conditioning workstation with a weighing chamber featuring a conditioning unit and control cabinet. The second unit is a laminar flow workplace to avoid the entry of foreign, airborne particles while the filters are being handled. The two units are located one next to another during normal operation and are connected by supply cables.

Since both the unused filters and the filters loaded with particles will, as a rule, have to be manually weighed several times in order to arrive at a mean value, the result is a very large number of weighing operations. The personnel is stressed by work which, though monotonous, nonetheless requires great concentration. Automating the entire weighing process brings about great reliability and precision both in weighing and in documentation. Human error can be eliminated in this way.

A prerequisite for running the entire process automatically is marking the individual filters so that they can be identified. To achieve this, the filters are laid in filter trays during the entire particle collection and weighing process. These two components are not separated until the weighing process is complete.

The patented filter trays are fitted with RFID transponders. This makes it possible to read filter code previously applied without touching the object. This also makes it possible for a reading unit to read out process data previously placed in storage.

The high capacity of the weighing system (640 filters) and the very short processing period ensure a continuous, non-interrupted operating sequence. Here new filter trays containing loaded filters are continuously supplied. The tray and filter are then separated automatically at the end of the process.

Filter trays and particle filter holders

Specially patented filter trays are used in the AWS-3 to transport and store the 47 mm sampling filters. The filter trays are made of potential-balancing polyoymethylene (POM). They are self-centering, which simplifies inserting the filter and exact positioning in the filter magazines. Each tray, as previously mentioned, is equipped with an RFID transponder so that the system can recognize the encoding and identify the filter trays and the filters inserted. In addition, the filter trays are equipped with internal data storage. Each tray is also provided with an alphanumeric code, readable from the outside and etched by laser marking.
Before collecting the particles in the engine's exhaust gas system, the unused filters have to be preconditioned and weighed.
Sampling then follows. To do so, a filter holder is inserted in the exhaust gas system. Located here are two RFID filter trays containing the filters and the appropriate support screens with their fastening devices.
After sampling is complete, the filter trays and the filters inserted there are removed from the filter holder. This procedure is carried out at the laminar flow workplace associated with the weighing system. The filter trays are then moved, together with the filters, to the weighing chamber; a transfer airlock is used for this purpose. This is necessary so that contamination does not skew the results of the weighing process.

Filter tray

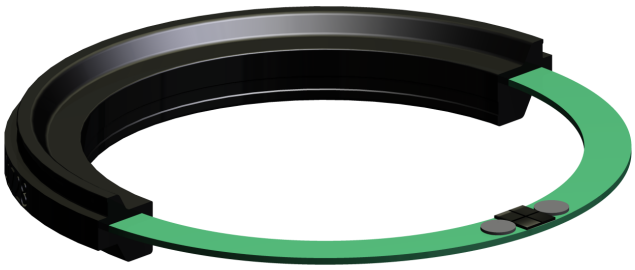

Cross section of the filter tray

Comde-Derenda GmbH
Kieler Strasse 9, 14532 Stahnsdorf / Germany
Phone: +49 3329 69027-10
Fax: +49 3329 69027-19
info@comde-derenda.de
www.comde-derenda.de

Pre-conditioning workstation

The pre-conditioning workstation comprises the conditioning unit with its HEPA filter, an ionization system, the control cabinet and the weighing chamber. All the units are located in a dust-resistant housing. To be found in the forward section of the pre-conditioning workstation are four filter magazines comprising turntables and magazine towers with a total of 640 slots. Installed in the rear section of the chamber is the handling system; it can move along three axes. At the center is the location for the ultra-microbalance. Installed on the right, inside the cabinet, is the airlock to introduce and remove the filters, while the filter cup feed is located on the left-hand side.

Conditioning unit

The conditioning unit in the AWS-3 ensures that the specified climatic conditions (temperature and relative humidity) are maintained during conditioning and gravimetric evaluation of the fine dust filters. The functions in this unit are heating, cooling, humidification and dehumidification. In addition, it generates a low-turbulence flow and positive pressure within the weighing chamber, preventing contamination by particles in the ambient air.

Ionization system

The AWS-3 is also equipped with a maintenance-free ionization system which neutralizes any electrostatic charges in the filters and thus boosts weighing accuracy. The system comprises two high-voltage ionization rods located near the scales. The configuration of the rods ensures that any charges in items being weighed are reliably eliminated from both sides.
The pre-conditioning workstation is also fitted with a device for non-contact identification and reading out the process data in storage.

Laminar flow workplace

The laminar flow workplace provides the reduced-contamination workstation required when dealing with fine dust filters. The filters are prepared for weighing and sampling here; they are also forwarded to and taken from the weighing chamber. In addition, the PC used to control the system and the associated monitor are installed here. The PC is fitted with two LAN sockets to make the connections to the pre-conditioning workstation and to the user's local area network and database. The software used in the normal case to operate the AWS-3 is also installed at this PC.

Filter magazines

The four filter magazines serve to accept the filters to be weighed. Each of the magazines consists of a magazine tower and a turntable fitted with a polymer slide-type bearing permitting rotation. Each tower is made up of 20 filter disks and each disk can accept 8 filter trays.
The magazines' overall capacity is thus 640 filters.
The handling system automatically inserts the filter trays into the magazines and removes them, as well. If necessary, the magazine towers can be lifted individually from the turntables.
The turntables for the magazines are driven by brushless servomotors and feature precision angular gearing that ensures exact positioning of the magazines relative to the transport arm.

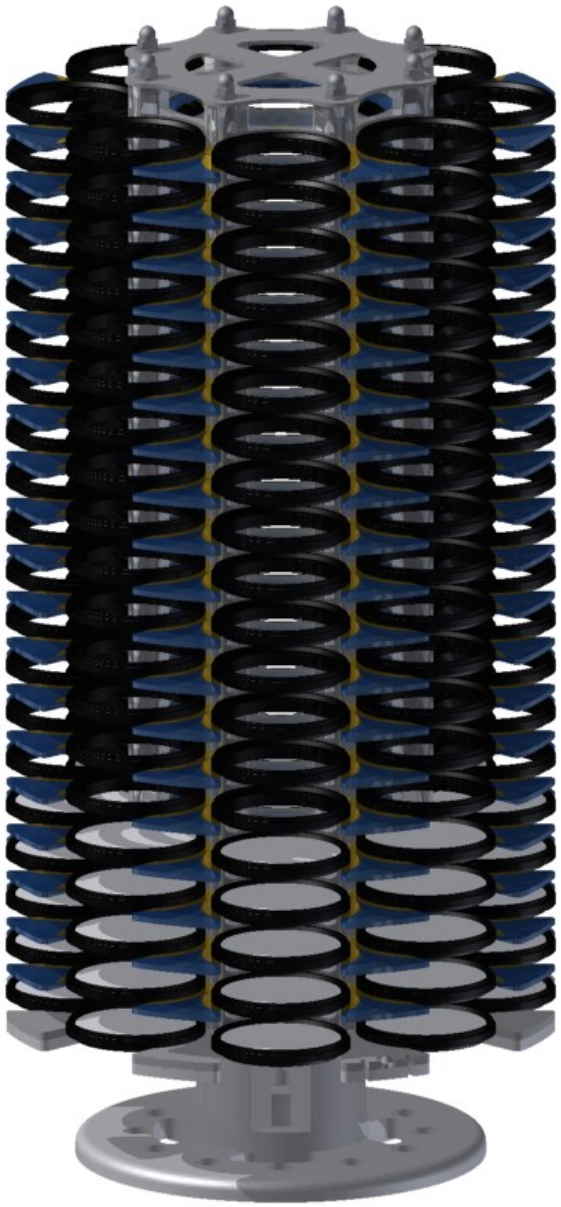

Filter tower

Comde-Derenda GmbH
Kieler Strasse 9, 14532 Stahnsdorf / Germany
Phone: +49 3329 69027-10
Fax: +49 3329 69027-19
info@comde-derenda.de
www.comde-derenda.de

Handling system

The AWS-3 handling system, moving along three axes, ensures the automatic transportation of fine dust filters, reference filters and reference weights within the system. The transport fork in the handling system picks up one filter tray in each case at the pre-programmed starting position and puts it down again at the destination position. The robot, moving along a linear axis, is powered by a brushless servomotor and enclosed gearing. All the cables and cable carriers are suitable for use in clean rooms.

The handling system is equipped with an RFID antenna used to detect the codes at filters and/or filter trays and for data exchange purposes.

The handling system is equipped with a camera, mounted above the transport fork.

The images supplied by the camera are evaluated by the system to detect any positions in the filter magazines or the transfer airlock that are unexpectedly occupied. This prevents collisions and the associated property damage that could result from the insertion of filters at points which are already occupied.

The fork at the transport arm is made of electrically conductive plastic. In normal operations the transport arm responds automatically to commands issued by the control software. If need arises, it can also be controlled by way of a jog dial. Manual control is normally not required but is provided for use.

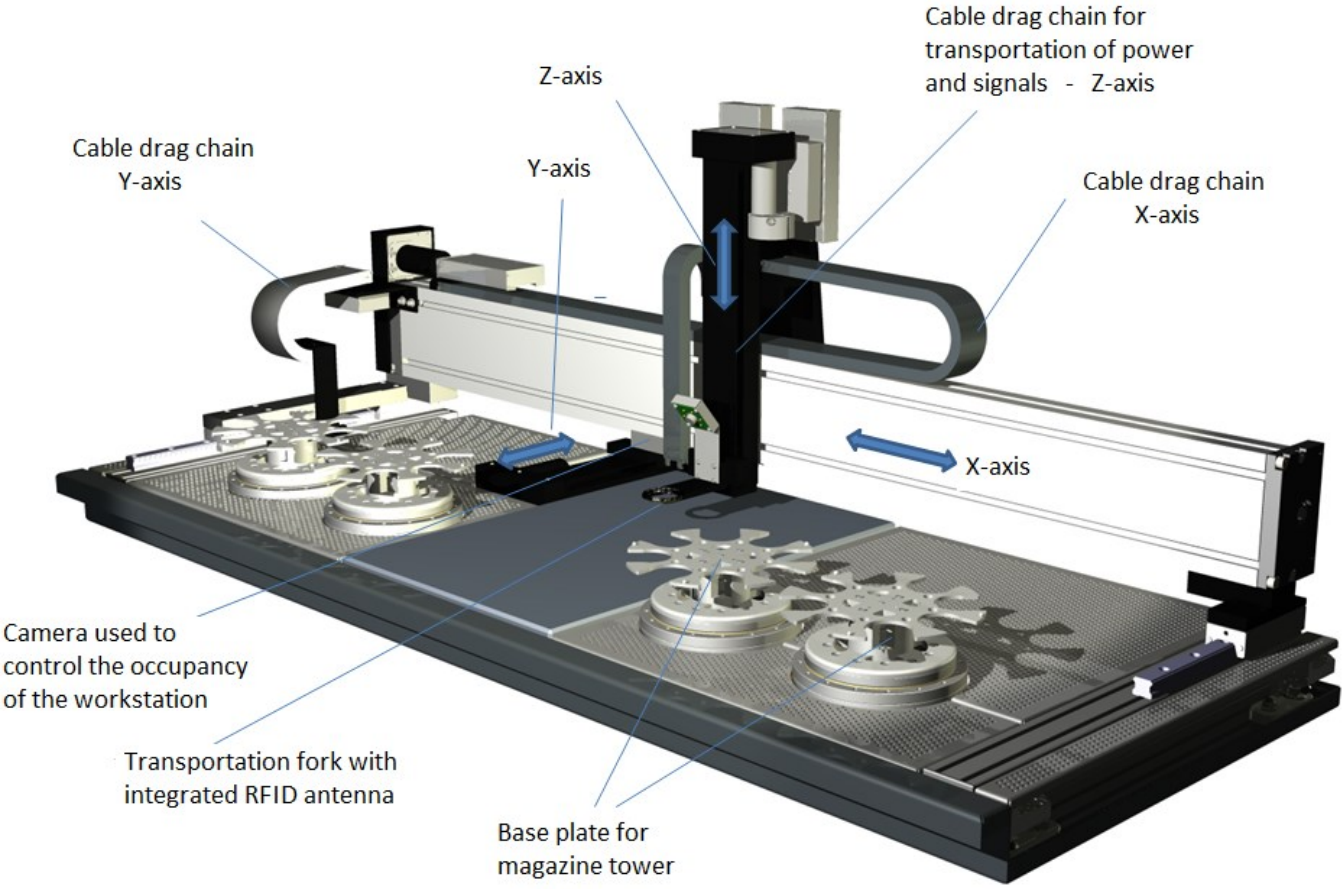

Ultra-microbalance

Used as a scale here is a highly precise, ultra-microbalance with data output, e.g. the Sartorius Cubis® 2.7S DM weighing module. This Sartorius module features weighing capacity of 2.1 g and readability of 0.0001 grams. It is also equipped with an integral, motor-powered draft shield. This closes before every weighing cycle to eliminate any potential influence on the weighing process. The weighing module is installed at the center of the AWS weighing chamber. To minimize vibrations, the location where the balance is installed uses a granite block to decouple it from the rest of the system.

Ultra-microbalance Sartorius Cubis

Comde-Derenda GmbH
Kieler Strasse 9, 14532 Stahnsdorf / Germany
Phone: +49 3329 69027-10
Fax: +49 3329 69027-19
info@comde-derenda.de
www.comde-derenda.de

Handover slot

The handover slot at the AWS-3 ensures that the sampling filters can be fed to and removed from the system in a simple fashion and without contaminating the weighing chamber. To do this, the filters and filter trays are laid in a removable slide insert (holding four filters); it is in turn placed in the slide at the handover slot. The slide is then entered manually into the weighing chamber, where the filter is picked up by the handling system and moved to the filter magazines. The filters are later discharged in the reverse order.

The slide in the handover slot is equipped with a linear guide with fixed stops, suited for use in clean rooms. Magnetic detents and verification of the position by way of proximity sensors ensure the correct positioning of the slide once it has been inserted. Since the handover slot is fitted with a window, the status of the handover slot and the slide can be checked visually.

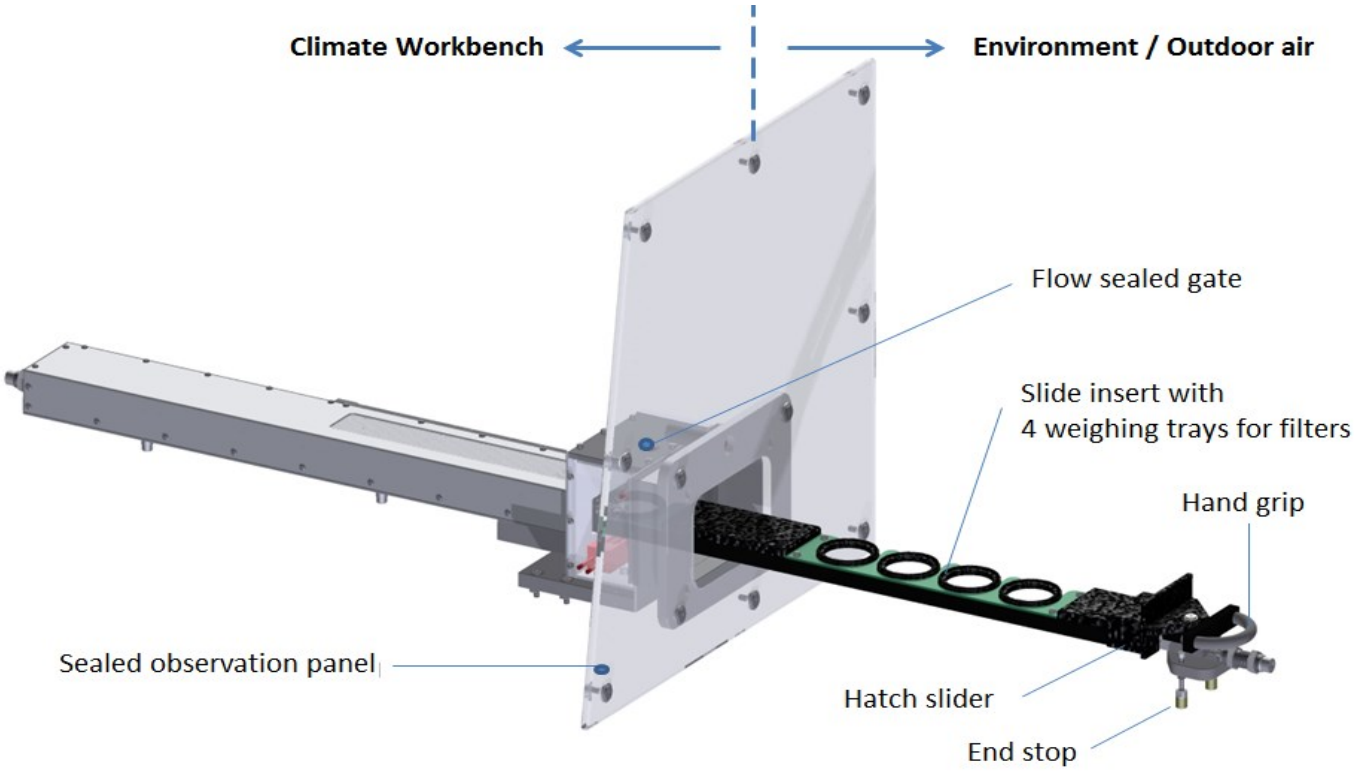

Collection unit for the separation of filter trays and sampling filters

The collection unit enables simple disposal of dust-laden sampling filters once they have been weighed while at the same time collecting the filter cups which are then again available. To do this, the handling system lays the dust-laden filters and their filter holders on a chute. The filters thus exit the weighing chamber. As they leave the chute they fall onto a helical tube. This tube serves as the separation unit; the filter trays are threaded onto the tube while the filters are dislodged by its tip. The filters then fall into the bottom of a plastic bag attached at the edge of the retaining angle; the filters can then be disposed of. The filter holders slide down the slope of the tube and accumulate at the lower end, where they can be removed for re-use.

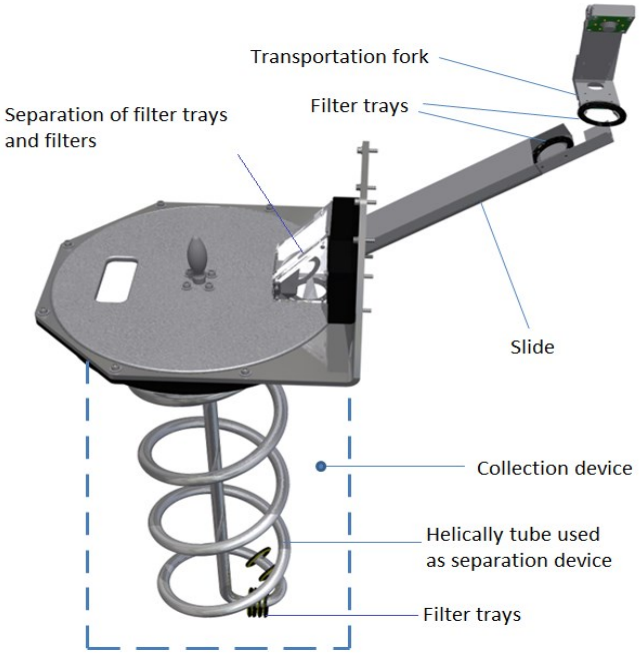

Comde-Derenda GmbH
Kieler Strasse 9, 14532 Stahnsdorf / Germany
Phone: +49 3329 69027-10
Fax: +49 3329 69027-19
info@comde-derenda.de
www.comde-derenda.de

Technical Data Automatic Weighing System Type AWS-3

Filter magazine	
Number of magazine towers holding filters:	4
Number of magazine discs / magazine tower:	20
Number of filter positions / magazine disc:	8
Number of filters / magazine tower:	160
Total capacity of the 4 magazine towers:	640 filters
Material of the magazine discs:	2 mm fiberglass reinforced double laminated epoxy resin with gold plated storage areas for the filter trays
Potential equalization:	By means of a special construction and gold plated points of contact between magazine towers, filter discs and filter trays
Drive system of the disc magazines:	Brushless servomotors
Positioning of the magazines:	By means of precision angular gearing
Filters	
Filter material:	All marked standard filter types
Filter diameter:	47 mm
Minimum weight of a single filter:	60 mg
Type of coding:	Filter trays fitted with RFID transponders
Decoding:	By means of a RFID antenna placed in the handling system
Ultra-microbalance	
Manufacturer:	Sartorius weighing module Cubis® 2.7SDM (other weighing systems can be used on request)
Reading precision (resolution):	Depending on the type of balance, e.g. 0.0001 mg:
Maximum load:	2.1 g
Location of microbalance:	Granite block with a large mass, decoupled from the main mounting rack
Calibration weights for the weighing system:	100 mg, 200 mg nominal value (DKD certified) Measuring accuracy correlating with class E2 (OIML)
Electronics	
Communication interface:	Ethernet RJ45
Data export (CSV file): (other data formats on customer request)	Total weight of unloaded filter (average value) Total weight of loaded filter (average value) Difference weight of unloaded and loaded filter (average value) Temperature, humidity rel., barometric pressure Filter number Sampling number Date / time Amount of weighings per Filter
Power	
Power supply:	230 V, 50 Hz
Power consumption:	250 VA
Dimensions and weight of mounting rack	
Width:	3600 mm
Depth:	800 mm
Working height:	830 mm
Total height:	2040 mm
Total weight:	approx. 800 kg
Conditioning of climate	
Temperate regulation:	Climate control unit (heating and cooling) with water (external compressor)
Humidifier unit:	Evaporator as air cooler unit
Permissible operating and environmental conditions:	15 … 32 °C, 30 … 60 % rel. humidity

Comde-Derenda GmbH
Kieler Strasse 9, 14532 Stahnsdorf / Germany
Phone: +49 3329 69027-10
Fax: +49 3329 69027-19
info@comde-derenda.de
www.comde-derenda.de

Dimensions Automatic Weighing System AWS-3

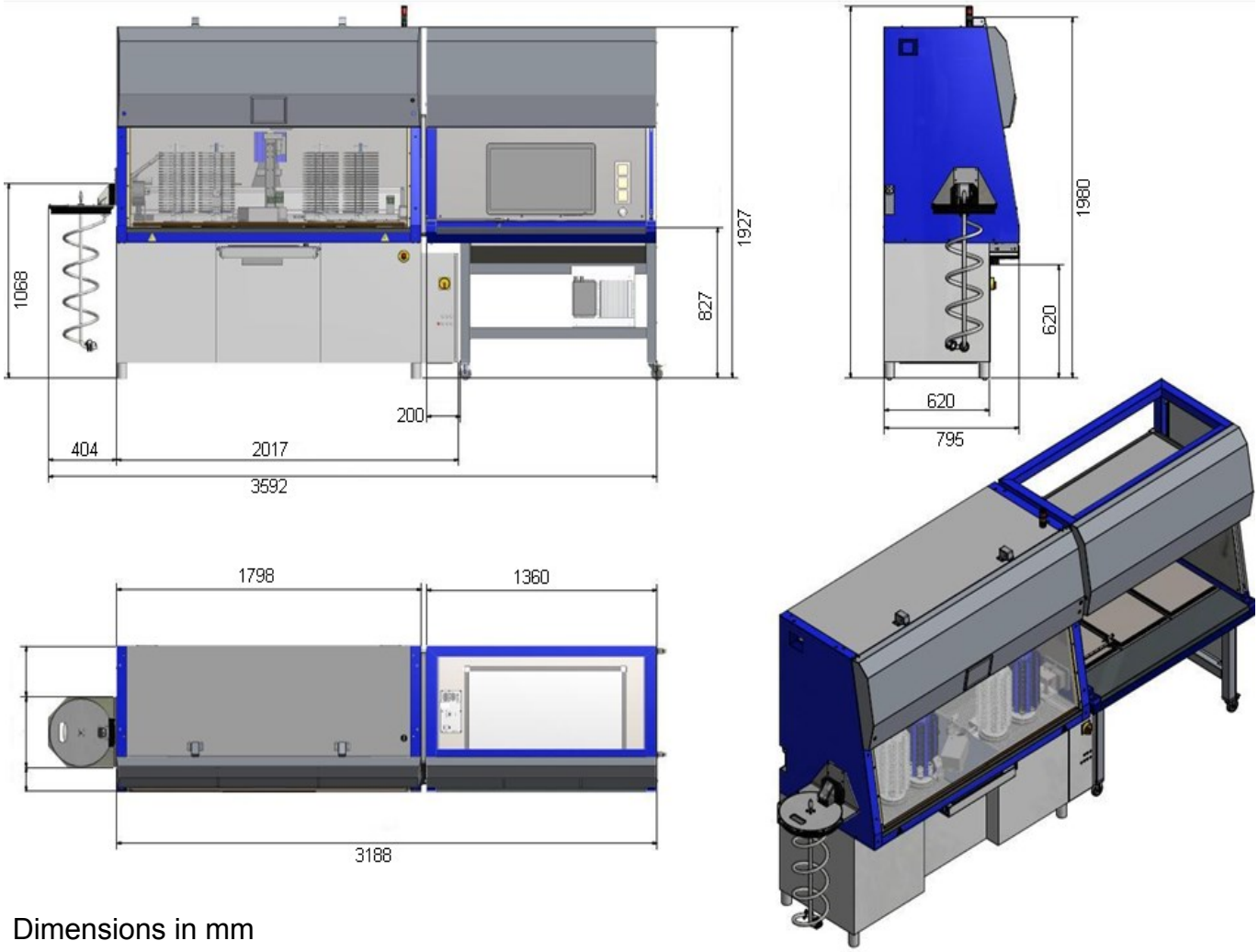

Dimensions in mm

Comde-Derenda GmbH was originally founded as an engineering office in Berlin, in the year 1972. The company's activities at that time included the development, production and sales of measurement and control systems and gas analysis systems.

Over the course of time, the engineering office focused on the development and production of devices and systems for the collection of particulates in the ambient air, used in the field of environmental protection.

COMDE GmbH was founded in the year 1992. The company in particular concentrated on the development and production of equipment to measure and monitor gas pressure and density in high-voltage circuit breakers (containing SF6 gas) and pressure in high-temperature gas.

The engineering office and COMDE GmbH were merged to form Comde-Derenda GmbH in the year 2012.
Our own building was erected in Stahnsdorf, near Berlin, in 2007. All the activities of the existing fields of operation are concentrated here.

Comde-Derenda GmbH has been certified as per the DIN EN ISO 9001:2008 standards for quality assurance.

Comde-Derenda GmbH in Stahnsdorf at Berlin

Comde-Derenda GmbH
Kieler Strasse 9, 14532 Stahnsdorf / Germany
Phone: +49 3329 69027-10
Fax: +49 3329 69027-19
info@comde-derenda.de
www.comde-derenda.de