Sensors

Gas Density and Dew Point Transmitters

Gas Density Transmitter

GDS-M

for SF_6 and other gases

Phone: +49 3329 69027-10
Fax: +49 3329 69027-19

Comde-Derenda GmbH
Kieler Strasse 9, 14532 Stahnsdorf/Germany

info@comde-derenda.com
comde-derenda.com

Gas Density Transmitter GDS-M

The gas density transmitter GDS-M continuously monitors the density and temperature of the insulating gas SF_6. For this purpose it possesses a piezoresistive pressure sensor and an evaluation unit with microprocessor. The measured values can be transmitted to a PC or the customer's own diagnostic system.

- **Pressure range 0.5 ... 11 bar abs. (7.25 ... 159.5 psi rel.)**
- **Piezoresistive pressure sensor**
- **Microprocessor evaluation unit**
- **Digital compensation for pressure and temperature signals**
- **Digital output RS-485**
- **Protection IEC 60529: IP 65**

Fields of application

- Power supply facilities
- High-voltage and gas-insulated switchgear (GIS)
- Medium-voltage systems
- Indoor and outdoor gas-insulated transformers and generator circuit breakers

Phone: +49 3329 69027-10
Fax: +49 3329 69027-19

Comde-Derenda GmbH
Kieler Strasse 9, 14532 Stahnsdorf/Germany

info@comde-derenda.com
comde-derenda.com

Gas Density Transmitter GDS-M

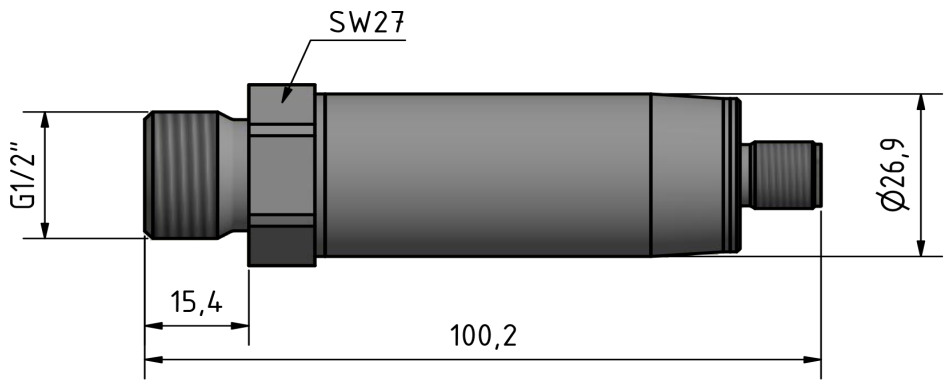

Dimensional drawing GDS-M G1/2“

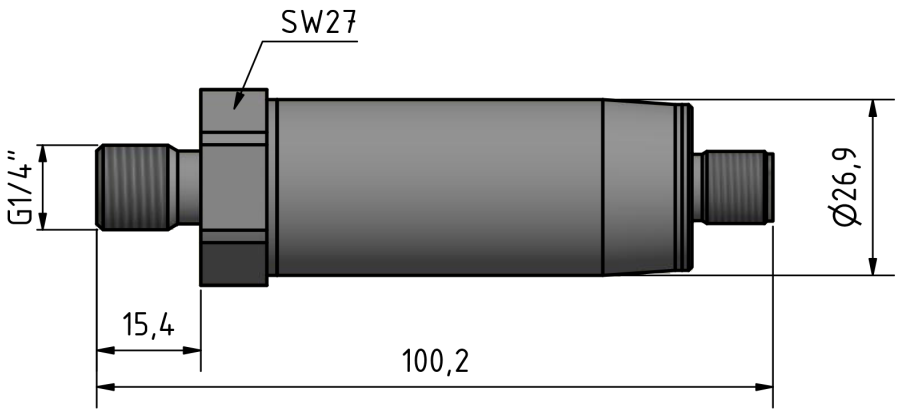

Dimensional drawing GDS-M G1/4“

Design

The gas density transmitter GDS-M consists of the following principal components:

- Tubular casing, stainless steel grade 1.4305
- Piezoresistive pressure sensor
- Electronic evaluation unit with microprocessor
- Pressure connection G 1/4 “ or G 1/2“ (customized connections available)
- Electrical connection with circular connector M12x1

Measuring method

Based on the high-precision, digitally compensated pressure and temperature signals of the piezoresistive sensor, the actual gas density is calculated with an optimal approximating polynomial for SF_6 gas density. The correct density value is read out with a cycle time of 64 ms.

Operating principle

By way of its piezoresistive sensor, the gas density transmitter GDS-M continuously measures the pressure and temperature in the relevant gas chamber. The signals generated by the sensor are digitally compensated by the evaluation unit with microprocessor and presented as a high-precision output signal. The output signal is transmitted to a connected PC or the customer’s own diagnostic system. The measured values can then be used for documentation, trend analysis or other purposes.

Unlike electromechanical density monitors, which serve only as simple switches when the loss of SF_6 violates set limit values, the GDS-M is capable of actively monitoring the gas density. The GDS-M can likewise be programmed to monitor the density of other gases.

Gas Density Transmitter GDS-M

Technical Data

Measurement ranges	
SF_6 density according to Beattie-Bridgeman formula	0 ... 67 kg/m³
Pressure	0.5 ... 11 bar abs. / 7.25 ... 159.5 psi abs.
Temperature	– 40 ... +80 °C / – 40 ... +176 °F
Overload pressure	30 bar

Accuracy (RS-485)	
Total error band, pressure	< ± 0.5 % FS
Total error band, temperature	< ± 1 % FS
Stability error, pressure	< 0.1 % FS
Stability error, temperature	< 0.3 % FS

Operating and storage conditions	
Operating temperature	– 40 ... + 80 °C / – 40 ... +176 °F
Storage Temperature	– 50 ... + 85 °C / – 58 ... +185 °F
Shock resistance test (IEC 60068-2-29)	100 × 20 g / 6 ms half-sine
Switch impulse test	20 g / 5 × 20 ms sine

Connections	
Pressure connection	G 1/2” or G 1/4” (standard) Customer-specified flange (optional)
Electrical connector	Round plug connector M12 x 1 / 8 contacts
Supply voltage	8 .... 30 VDC
Power requirement	< 3 mA
Reverse polarity protection	Yes
Short circuit protection	Yes
Protection (IEC 60947)	IP 65

Interfaces	
Digital interface (incl. integrated comm. interface)	RS-485
Readout cycle	Every 64 ms
Response time (typical)	1 ... 10 ms (2 ... 5 ms)

Material / Weight	
Housing material	Stainless steel 1.4305
Weight	approx. 185 g

Comde-Derenda GmbH reserves the right to discontinue or change specifications, design or materials, without notice, consistent with sound engineering principles and quality practices.

Ed. 2020-12

Phone: +49 3329 69027-10
Fax: +49 3329 69027-19

Comde-Derenda GmbH
Kieler Strasse 9, 14532 Stahnsdorf/Germany

info@comde-derenda.com
comde-derenda.com