COMDE DERENDA

Gas Density and Dew Point Transmitters

Gas Density and Dew Point Transmitter

GD-DP

for SF_6 and other gases

Phone: +49 3329 69027-10
Fax: +49 3329 69027-19

Comde-Derenda GmbH
Kieler Strasse 9, 14532 Stahnsdorf/Germany

info@comde-derenda.com
comde-derenda.com

Gas Density and Dew Point Transmitter GD-DP

The GD-DP continuously monitors both the density and temperature of the insulating gas SF_6 and the dew point. For this purpose it possesses a piezoresistive pressure sensor, a polymer dew point sensor, and an evaluation unit with microprocessor. The measured values can be transmitted to a PC or a customer-specific diagnostic system.

- **Pressure range 0.5 ... 11 bar rel. (7.25 ... 159.5 psi rel.)**
- **Dew point range -40 to +40 °C**
- **Microprocessor evaluation unit**
- **Digital compensation for pressure and temperature signals**
- **Digital or analog output**
- **Protection IEC 60529: IP 65**

Fields of application

- Power supply facilities
- High-voltage and gas-insulated switchgear (GIS)
- Medium-voltage systems
- Indoor and outdoor gas-insulated transformers and generator circuit breakers

Phone: +49 3329 69027-10
Fax: +49 3329 69027-19

Comde-Derenda GmbH
Kieler Strasse 9, 14532 Stahnsdorf/Germany

info@comde-derenda.com
comde-derenda.com

Gas Density and Dew Point Transmitter GD-DP

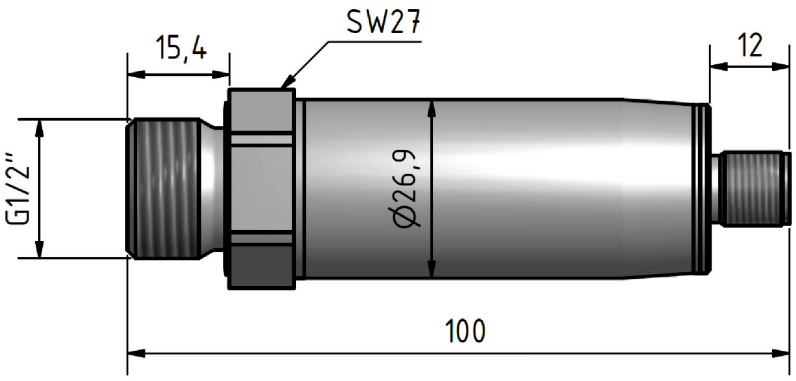

Dimensional drawing GD-DP

Design

The gas density transmitter GDS consists of the following principal components:

- Tubular casing, stainless steel
- Piezoresistive pressure sensor
- Capacitive polymer dew point sensor
- Electronic evaluation unit with microprocessor
- Pressure connection G 1/2“
- Electrical connection with circular connector M12x1

Measuring method

Based on the high-precision, digitally compensated pressure and temperature signals of the piezoresistive sensor, the actual gas density is calculated with an optimal approximating polynomial for SF_6 gas density. The correct density value is read out with a cycle time of 64 ms. At the same time, the device’s capacitive polymer dew point sensor continuously monitors the current dew point.

Operating principle

By way of its sensors, the GD-DP continuously measures the gas density, temperature and the current dew point in the relevant gas chamber. The signals generated by the sensors are digitally compensated by the evaluation unit with microprocessor and presented as a high-precision output signal. The output signal is transmitted to a connected PC or the customer’s own diagnostic system. The measured values can then be used for documentation, trend analysis or other purposes.

Unlike electromechanical density monitors, which serve only as simple switches when the loss of SF6 violates set limit values, the GD-DP is capable of actively monitoring the gas density and dew point temperature. The GD-DP can likewise be programmed to monitor the density and dew point of other gases.

The chart below shows the uncertainty of the dew point measurement in relation to the ambient temperature.

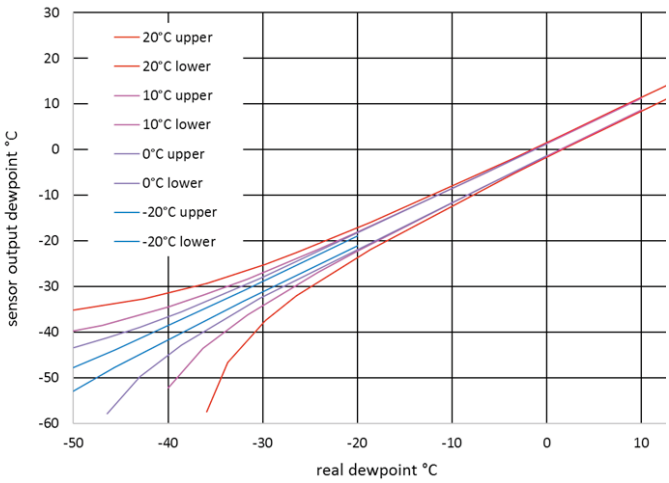

Phone: +49 3329 69027-10
Fax: +49 3329 69027-19
Comde-Derenda GmbH
Kieler Strasse 9, 14532 Stahnsdorf/Germany
info@comde-derenda.com
comde-derenda.com

Gas Density and Dew Point Transmitter GD-DP

Technical Data

Measurement ranges	
SF_6 density according to Beattie-Bridgeman formula	0 ... 67 kg/m³
Pressure	0.5 ... 11 bar abs. / 7.25 ... 159.5 psi abs.
Dew point temperature	– 40 ... +40 °C / – 40 ... +104 °F
Absolute humidity	0 ... 50 g/m³
Overload pressure	16 bar / 232 psi

Accuracy	
Total error band, pressure	< ± 0.5 % FS
Total error band, temperature	< ± 1 % FS
Total error, dew point temperature	< ± 2 K *
Total error, absolute humidity	< ± 0.2 g/m³ *
Stability error, pressure	< 0.1 % FS
Stability error, temperature	< 0.3 % FS
Stability error, dew point temperature	< 1.5 K *
Stability error, absolute humidity	< 0.15 g/m³ *
Measurement response time	< 10 sec

Operating and storage conditions	
Operating temperature	– 40 ... + 80 °C / – 40 ... +176 °F
Storage Temperature	– 50 ... + 85 °C / – 58 ... +185 °F
Shock resistance test (IEC 60068-2-29)	100 × 20 g / 6 ms half-sine
Switch impulse test	20 g / 5 × 20 ms sine

Connections	
Pressure connection	G 1/2" (standard)
Electrical connector	Round plug connector M12 x 1 / 8 contacts
Supply voltage	8 .... 30 VDC
Power requirement	2.6 ... 2.7 mA
Short circuit protection	Yes
Protection (IEC 60947)	IP 65

Interface	
Digital interface (incl. integrated comm. interface)	RS-485
Response time (typical)	1 ... 10 ms (2 ... 5 ms)

Material / Weight	
Housing material	Stainless steel 1.4305
Weight	approx. 170 g

* Calibration is recommended once a year. Total error of dew point temperature is only guaranteed for ambient temperature ≤ –20 °C. For real dew point temperatures of ≤ –20 °C, the total error can be significantly higher (see chart on page 3).

Comde-Derenda GmbH reserves the right to discontinue or change specifications, design or materials, without notice, consistent with sound engineering principles and quality practices.

Ed. 2019-04

Phone: +49 3329 69027-10
Fax: +49 3329 69027-19

Comde-Derenda GmbH
Kieler Strasse 9, 14532 Stahnsdorf/Germany

info@comde-derenda.com
comde-derenda.com